Air/water heat pump NIBE F2040

NIBE F2040 is an intelligent and compact inverter-controlled air/water heat pump. NIBE F2040 provides optimum savings since the heat pump automatically adapts to your home's output requirements all year round.

The heat pump works down to an outdoor temperature of -20°C and at the same time supplies up to 58°C in supply line temperature. The effective cooling function allows the heat pump to deliver a comfortable indoor climate even at high outdoor temperatures..

Thanks to smart technology, the product gives you control over your energy consumption and will be a key part of your connected home. The efficient control system automatically adjusts the indoor climate for maximum comfort, and you do nature a favour at the same time.

- Compact heat pump that adapts to your home's requirements.
- High capacity even down to -20°C and effective cooling function.
- Energy-saving smart technology with user-friendly control.

This is how NIBE F2040 works

Installation method

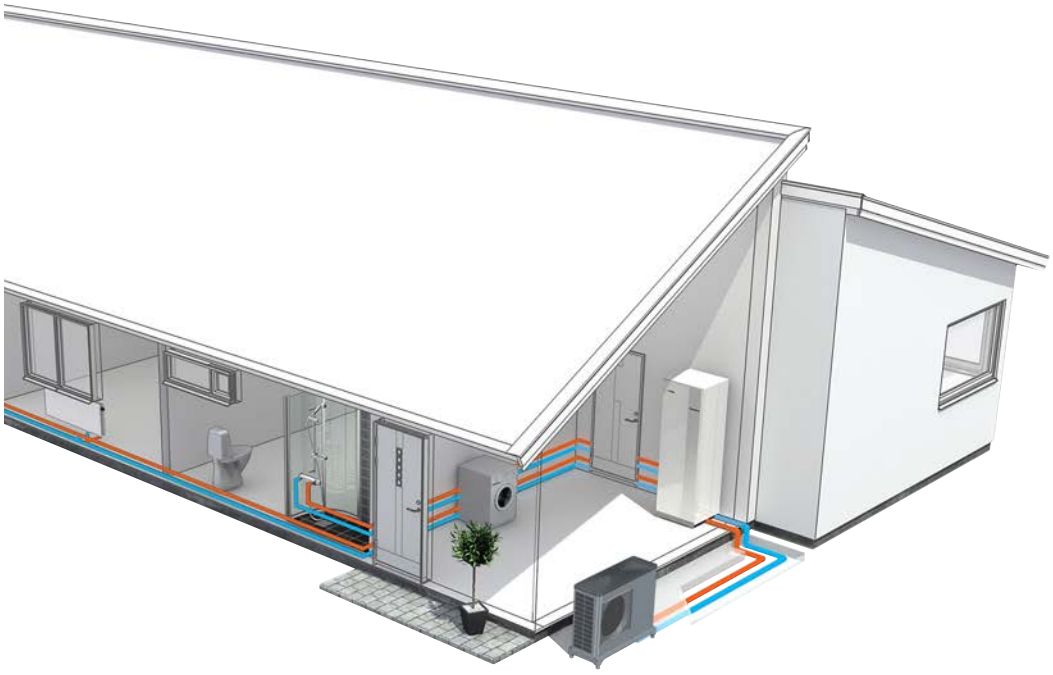

F2040 – a part of your climate system where F2040 is intended to be combined with one of the indoor modules VVM or the control modules SMO.

Together with an indoor module, F2040 creates a complete heating/cooling and hot water unit. Our flexible indoor modules provide efficient heating and high hot water performance. VVM indoor modules are complete with a smart and user-friendly control system, hot water heater, additional heat, self-regulating circulation pump, etc.

The control modules, SMO, offer a flexible system solution that can be easily customised. For systems with SMO, different components such as water heaters, additional heat and other accessories can be selected to suit the installation's requirements. Up to eight F2040 can be connected to a SMO 40.

There is a wide range of system solutions and accessories for NIBE's indoor modules and control modules.

COMPATIBLE INDOOR MODULES (VVM) AND CONTROL MODULES (SMO)

	VVM 310	*VVM 320*	*VVM 500*	*SMO 20*	*SMO 40*
F2040-6	X	X	X	X	X
F2040-8	X	X	X	X	X
F2040-12	X	X	X	X	X
F2040-16	X		X	X	X

INDOOR MODULES

VVM 310

Part no. 069 430

VVM 310

With integrated EMK 310

Part no. 069 084

VVM 320

Stainless steel, 1x230 V

Part no. 069 111

VVM 320

Stainless steel, 3x230 V

Part no. 069 113

VVM 320

Enamel, 3x400 V

With integrated EMK 300

Part no. 069 110

VVM 320

Stainless steel, 3x400 V

Part no. 069 109

VVM 320

Copper, 3x400 V

Part no. 069 108

VVM 500

Part no. 069 400

CONTROL MODULES

SMO 20

Control module
Part no. 067 224

SMO 40

Control module
Part no. 067 225

Principle of operation

Principle of operation with hot water and a heating system. The heating medium side and the domestic hot water side must be fitted with the necessary safety equipment in accordance with the applicable regulations.

EXPLANATION

EB15 Indoor module (VVM 320)

EB101 Heat pump (F2040)
FL10 Safety valve, heat pump
QM1 Tapping valve
QM40 Shut-off valve
QZ2 Filterball
XL1 Connection, heating medium out of F2040
XL2 Connection, heating medium in to F2040,

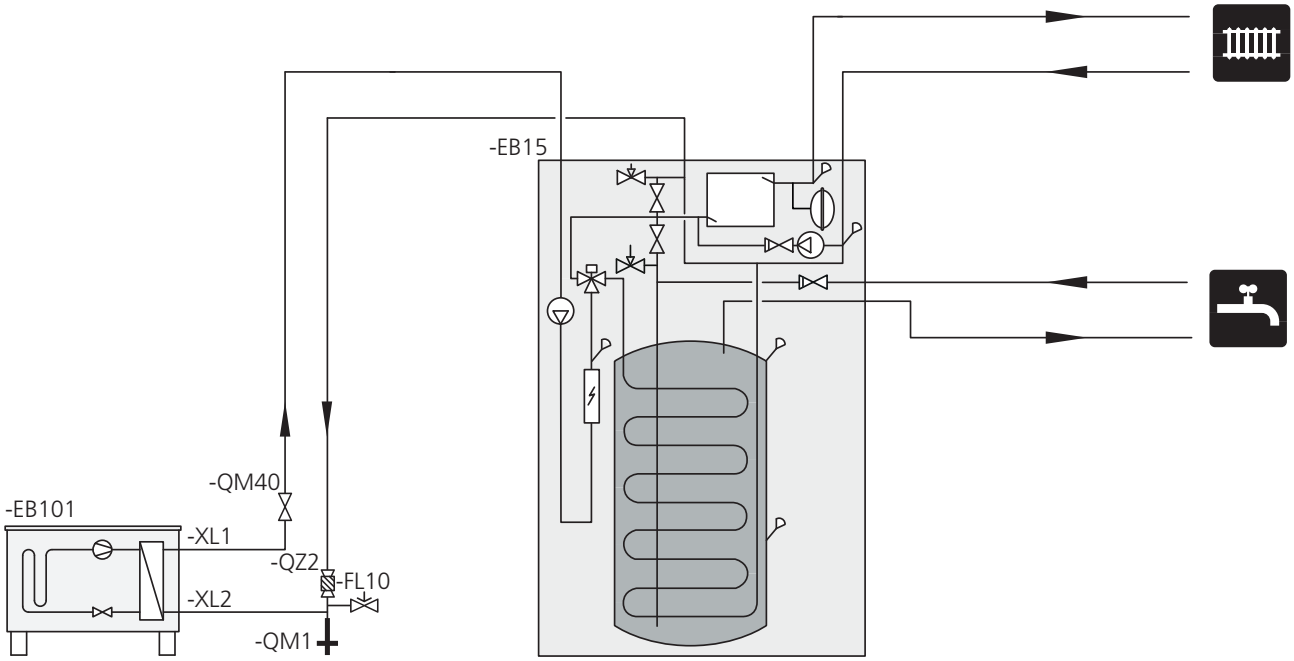

Good to know about NIBE F2040

Transport and storage

F2040 must be transported and stored vertically.

Installation and positioning

- Place F2040 outdoors on a solid level base that can take the weight, preferably a concrete foundation. If concrete slabs are used they must rest on asphalt or shingle.
- The concrete foundation or slabs must be positioned so that the lower edge of the evaporator is at the level of the average local snow depth, although a minimum of 300 mm.
- The F2040 should not be positioned next to sensitive walls, for example, next to a bedroom.
- Also ensure that the placement does not inconvenience the neighbours.
- F2040 must not be placed so that recirculation of the outdoor air can occur. This causes lower output and impaired efficiency.
- The evaporator should be sheltered from direct wind, which negatively affects the defrosting function. Place F2040 protected from wind against the evaporator.
- Large amounts of condensation water, as well as melt water from defrosting, may be produced. Use the accessory KVR 10, see page 7.
- Care must be exercised so that the heat pump is not scratched during installation.

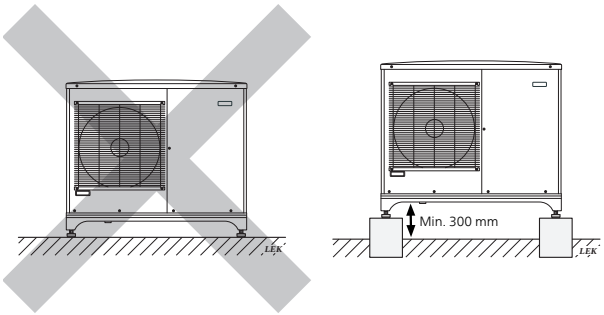

Do not place F2040 directly on the lawn or other non solid surface.

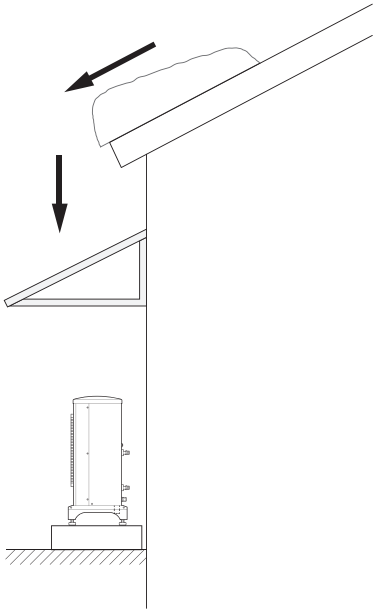

If there is a risk of snow slip from roof, a protective roof or cover must be erected to protect the heat pump, pipes and wiring.

Supplied components

Local differences in the enclosed kit may occur. See relevant installer manual for more information.

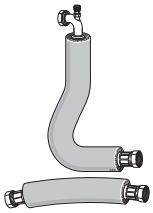

2 x flexible pipes (DN25, G1") with 4 x gaskets.

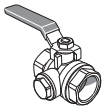

Filterball (G1").

Installation area

The distance between F2040 and the house wall must be at least 150 mm. Clearance in front of F2040 should be at least one metre.

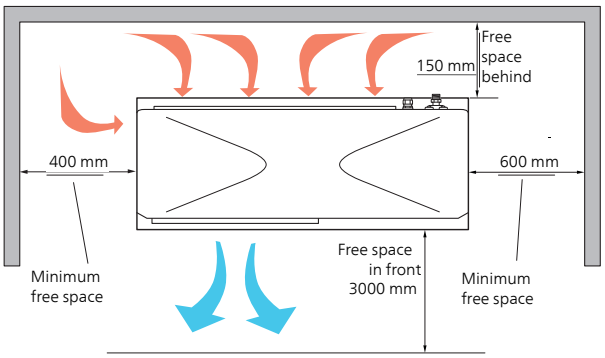

Installation

Inspection of the installation

Current regulations require the heating installation to be inspected before it is commissioned. The inspection must be carried out by a suitably qualified person and should be documented. The above applies to closed heating systems.

If the heat pump is replaced, the installation must be inspected again.

Condensation water trough

The condensation water trough collects and leads away most of the condensation water from the heat pump.

It is important to the heat pump function that condensation water is led away and that the drain for the condensation water run off is not positioned so that it can cause damage to the house.

Condensation runoff should be checked regularly, especially during the autumn. Clean if necessary.

Pipe with heating cable for draining the condensation water trough is not included.

To ensure this function the accessory KVR 10 should be used.

The electrical installation and wiring must be carried out under the supervision of an authorised electrician.

- The condensation water (up to 50 litres/24 hrs) that collects in the trough should be routed away by a pipe to an appropriate drain, it is recommended that the shortest outdoor stretch possible is used.
- The section of the pipe that can be affected by frost must be heated by the heating cable to prevent freezing.
- Route the pipe downward from F2040.
- The outlet of the condensation water pipe must be at a depth that is frost free or alternatively indoors (with reservation for local ordinances and regulations).
- Use a water trap for installations where air circulation may occur in the condensation water pipe.
- The insulation must seal against the bottom of the condensation water trough.

RECOMMENDED ALTERNATIVE FOR LEADING OFF CONDENSATION WATER

If none of the recommended alternatives is used good lead off of condensation water must be assured.

Stone caisson

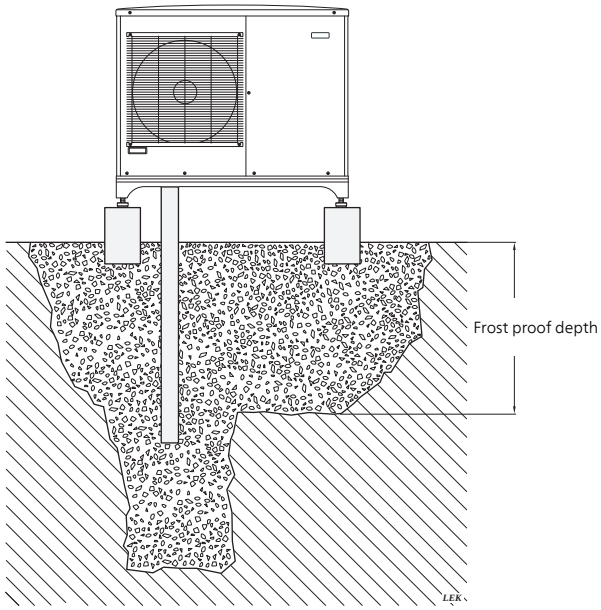

If the house has a cellar the stone caisson must be positioned so that condensation water does not affect the house. Otherwise the stone caisson can be positioned directly under the heat pump.

The outlet of the condensation water pipe must be at frost free depth.

Drain indoors

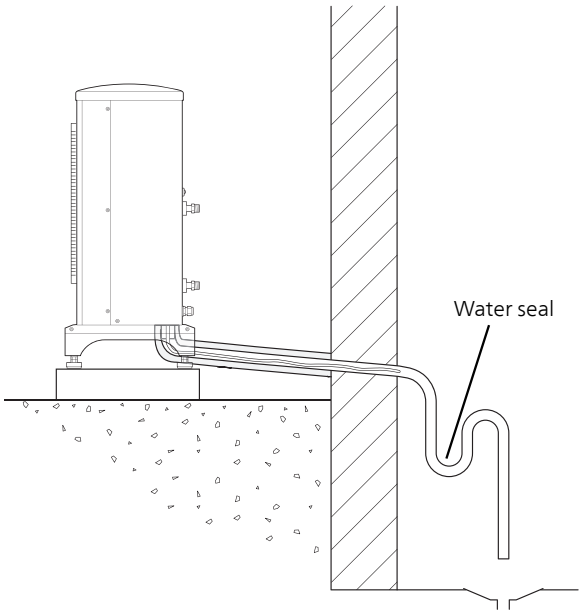

The condensation water is lead to an indoor drain (subject to local rules and regulations).

Route the pipe downward from F2040.

The condensation water pipe must have a water seal to prevent air circulation in the pipe.

KVR 10 spliced as illustrated. Pipe routing inside house not included.

Gutter drainage

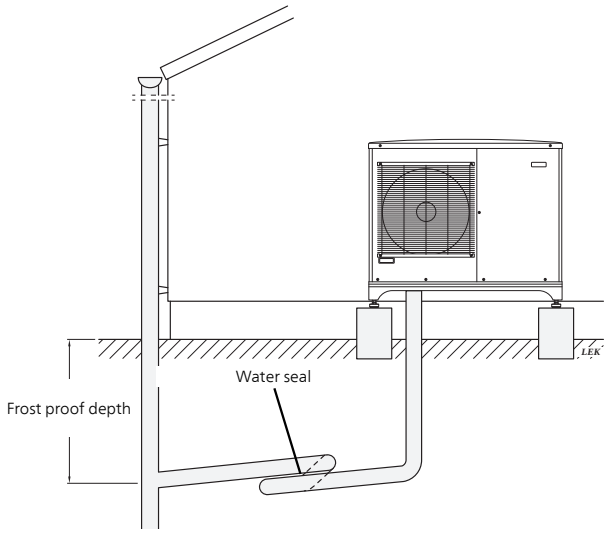

The outlet of the condensation water pipe must be at frost free depth.

Route the pipe downward from F2040.

The condensation water pipe must have a water seal to prevent air circulation in the pipe.

Pipe installation

GENERAL

Pipe installation must be carried out in accordance with current norms and directives.

F2040 can only operate up to a return temperature of about 55 °C and an outgoing temperature of about 58 °C from the heat pump.

F2040 is not equipped with external shut off valves on the water side; these must be installed to facilitate any future servicing. The return temperature is limited by the return line sensor.

Water volumes

When docking with F2040 free flow in the climate system is recommended for correct heat transfer. This can be achieved by use of a bypass valve. If free flow cannot be ensured, it is recommended that a buffer tank (NIBE UKV) is installed.

Following water volumes are recommended

F2040	*-6*	*-8*	*-12*	*-16*
Minimum volume, climate system during heating/cooling	20 l	50 l	80 l	150 l
Minimum volume, climate system during under floor cooling	50 l	80 l	100 l	150 l

PIPE COUPLING HEATING MEDIUM CIRCUIT

- The heat pump must be vented via the upper connection using the venting nipple on the enclosed flexible hose.
- Install the enclosed particle filter before the inlet, i.e. the lower connection on F2040.
- All outdoor pipes must be thermally insulated with at least 19 mm thick pipe insulation.
- Install shutoff and drain valves so that F2040 can be emptied in the event of prolonged power failures.
- The supplied flexible hoses act as vibration dampers. The flexible pipes are fitted so an elbow is created, thus acting as vibration damping.

Charge pump

The charge pump (not included in the product) is powered and controlled from the indoor module/control module. It has a built-in anti-freezing function and must therefore not be switched off when there is a risk of freezing.

At temperatures below +2 °C the charge pump runs periodically, to prevent the water from freezing in the charge circuit. The function also protects against excess temperatures in the charge circuit.

PRESSURE DROP DIAGRAM

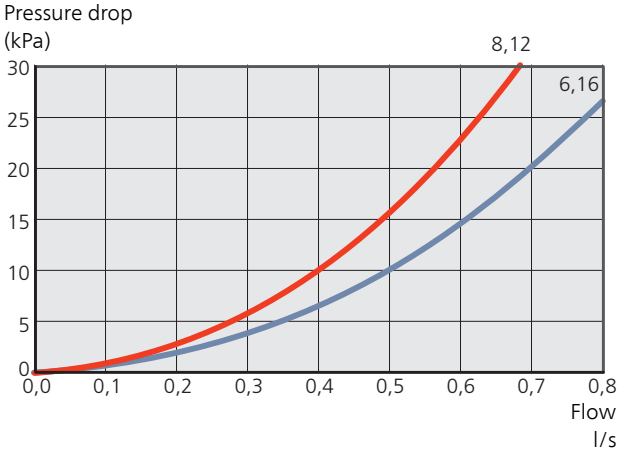

PIPE CONNECTIONS FLEX HOSE

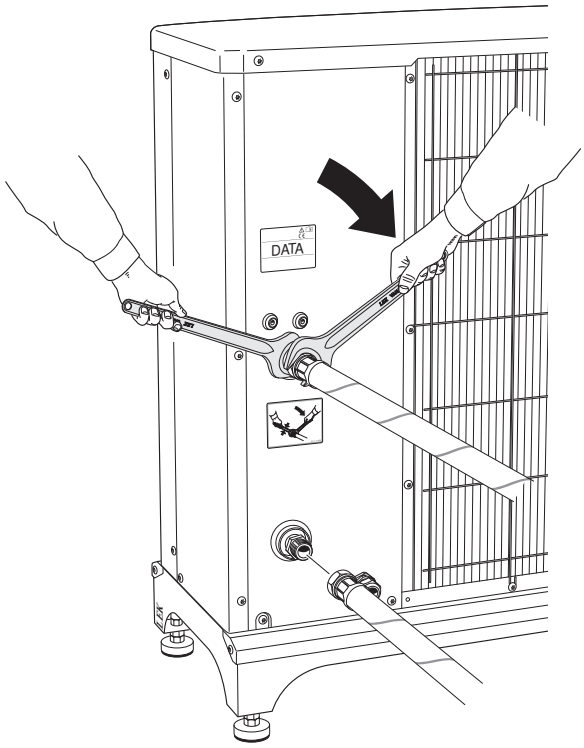

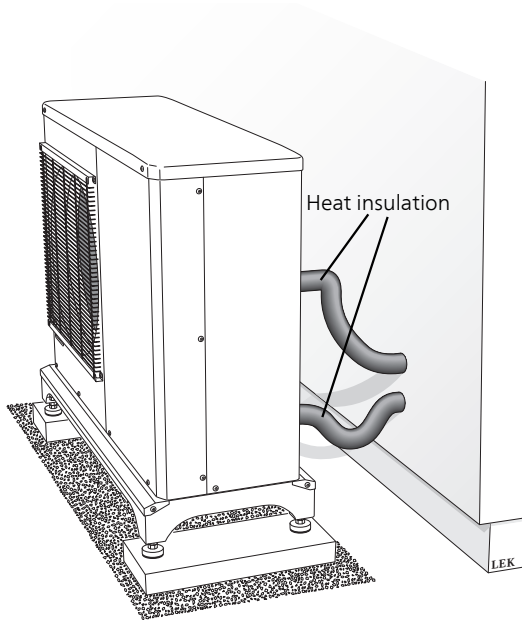

DOCKING

F2040 can be connected in several ways. The necessary safety equipment must be installed in accordance with current regulations for all docking options.

See nibe.se/dockning for more detailed docking options.

CONNECTING ACCESSORIES

Instructions for connecting accessories can be found in the installation instructions provided for the respective accessory. See page 23 for a list of possible extended functions.

Electrical connections

- The heat pump must not be connected without the permission of the electricity supplier and must be connected under the supervision of a qualified electrician.
- If a miniature circuit-breaker is used, this must have motor characteristic "C" (compressor operation). For MCB size, see "Technical Specifications" in the Installer Manual.
- F2040 does not include a circuit breaker on the incoming power supply. For this reason, the heat pump's supply cable must be connected to a circuit breaker with at least a 3 mm breaking gap. If the building is equipped with an RCD, the heat pump should be equipped with a separate one. The RCD should have a nominal tripping current of no more than 30 mA. Incoming supply must be 230 V 50Hz via electrical distribution units with fuses.
- If an insulation test is to be carried out in the building, disconnect the heat pump.
- Communication cable is inserted from the rear.
- Connect communication cable from terminal block to the indoor module.

Electrical installation and any servicing must be carried out under the supervision of a qualified electrician. Disconnect the current with the circuit breaker before carrying out any servicing. Electrical installation and wiring must be carried out in accordance with the national stipulations in force.

Maintenance

When your heat pump is located outdoors some external maintenance is required.

Insufficient maintenance can cause serious damage to F2040, which is not covered by the guarantee.

Checking grilles and bottom panel

Check that the inlet grille is not clogged by leaves, snow or anything else regularly throughout the year.

You should be vigilant during windy conditions and/or in the event of snow as the grilles can become blocked.

Also check that the drain holes in the bottom panel (three) are free from dirt and leaves.

Regularly check that condensation is routed away correctly through the condensation pipe. Ask your installer for assistance if required.

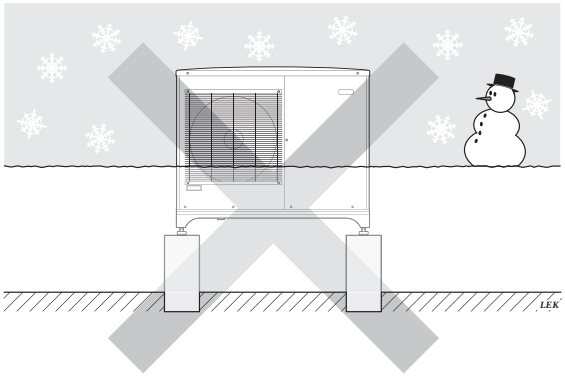

Prevent snow building up and covering the grille on F2040.

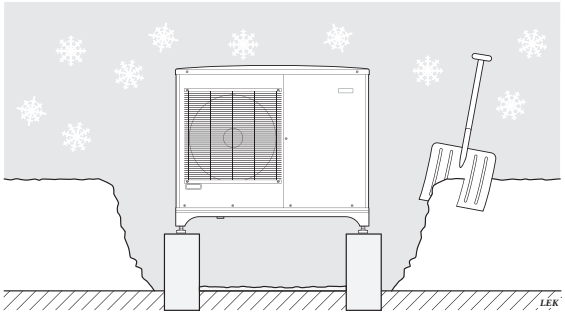

Keep free of snow and/or ice.

Cleaning the outer casing

If necessary the outer casing can be cleaned using a damp cloth.

Care must be exercised so that the heat pump is not scratched when cleaning. Avoid spraying water into the grilles or the sides so that water penetrates into F2040. Prevent F2040 coming into contact with alkaline cleaning agents.

Functions

When connection to NIBE indoor module / control module (VVM / SMO) is ready, you can control your unit via the indoor module / control module.

Control, general

The indoor temperature depends on several different factors. Sunlight and heat emissions from people and household machines are normally sufficient to keep the house warm during the warmer parts of the year. When it gets colder outside, the climate system must be started. The colder it is outside, the warmer radiators and under floor heating system must be.

Control of the heat production is performed based on the "floating condensing" principle, which means that the temperature level needed for heating at a specific outdoor temperature is produced based on collected values from the outdoor and supply temperature sensors. The room sensor can also be used to compensate the deviation in room temperature.

Heat production

The supply of heat to the house is regulated in accordance with the heating curve setting selected. After adjustment, the correct amount of heat for the current outdoor temperature is supplied. The supply temperature of the heat pump will oscillate around the theoretically required value.

OWN CURVE

F2040 has pre-programmed non-linear heating curves. It is also possible to create your own defined curve. This is an individual linear curve with a number of break points. You select break points and the associated temperatures.

Hot water production

Hot water charging starts when the temperature has fallen to the set start temperature. Hot water charging stops when the hot water temperature at the hot water sensor has been reached.

For occasional higher hot water demand, there is a function called "temporary lux" that allows the temperature to be raised via one time increase or up to 12 hours (selected in the menu system).

It is also possible to set F2040 in holiday mode, which means that the lowest possible temperature is achieved without the risk of freezing.

Additional heat only

ADDITIONAL HEAT ONLY

The indoor module (VVM), which is connected to F2040, can be used with the additional heat alone (electric boiler) to produce heating and hot water, for example before the outdoor module is installed.

Alarm indications

The status lamp lights red in the event of an alarm and the display shows detailed information depending on the fault. An alarm log is created with each alarm containing a number of temperatures, times and operating status.

The display

The indoor module (VVM) / control module (SMO) is controlled using a clear and easy to use display.

Instructions, settings and operational information are shown on the display. You can easily navigate between the different menus and options to set the comfort or obtain the information you require.

The display unit is equipped with a USB socket that can be used to update the software and save logged information in F2040.

Visit nibeuplink.com and click the "Software" tab to download the latest software for your installation.

NIBE Uplink

Using the Internet and NIBE Uplink, you can obtain a quick overview and the present status of the installation and the heating in your home. You can obtain a good overall view, allowing you to monitor and control the heating and hot water comfort effectively. If the system is affected by a malfunction, you receive an alert via e-mail that allows you to react quickly.

NIBE Uplink also gives you the opportunity to control the comfort in your home easily, no matter where you are.

RANGE OF SERVICES

You have access to different levels of service via NIBE Uplink. A basic level that is free and a premium level where you can select different extended service functions for a fixed annual subscription fee (the subscription fee varies depending on the selected functions).

NIBE Uplink also available as an app from App Store and Google Play.

INSTALLATION AND ASSOCIATED EQUIPMENT REQUIREMENTS

The following is required in order for NIBE Uplink to function with the installation:

- Network cable (straight, at least Cat 5E UTP).
- Internet connection.
- Web browser that supports JavaScript.

For further presentation, visit nibeuplink.com.

NIBE SMART PRICE ADAPTION™

Smart Price Adaption is not available in all countries. Contact your NIBE dealer for more information.

Smart Price Adaption adjusts the heat pump's consumption according to the time of day that electricity prices are lowest. This allows for savings, provided that the hourly rate subscription has been signed with the electricity supplier.

The function is based on hourly rates for the coming day being downloaded via NIBE Uplink. To use the function, an Internet connection and account on NIBE Uplink are necessary.

SMART HOME

When you have a smart home system that can communicate with NIBE Uplink, you can control the installation via an app by activating the “smart home” function.

By allowing connected units to communicate with NIBE Uplink, your heating system becomes a natural part of your homesmart home and gives you the opportunity to optimise the operation.

Remember that the “smart home” function requires NIBE Uplink in order to work.

Technical data

Dimensions and setting-out coordinates

F2040-6

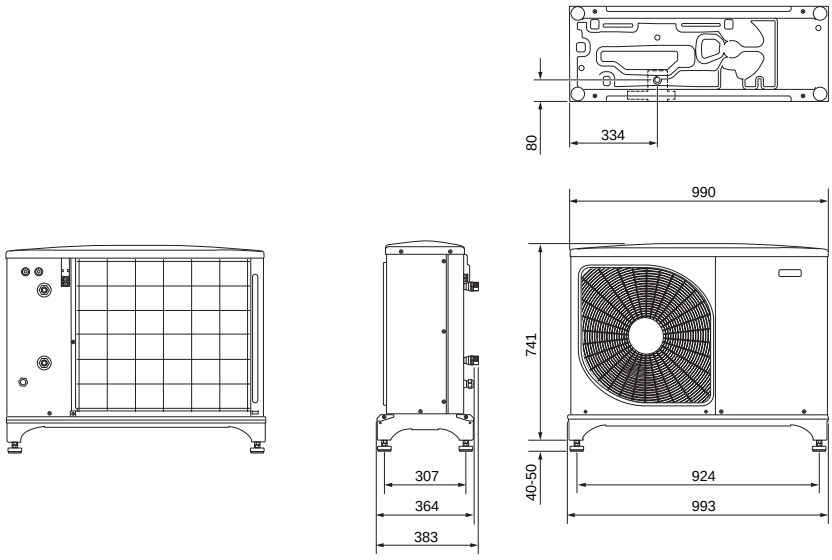

* Accessory KVR 10 is required.

F2040-8

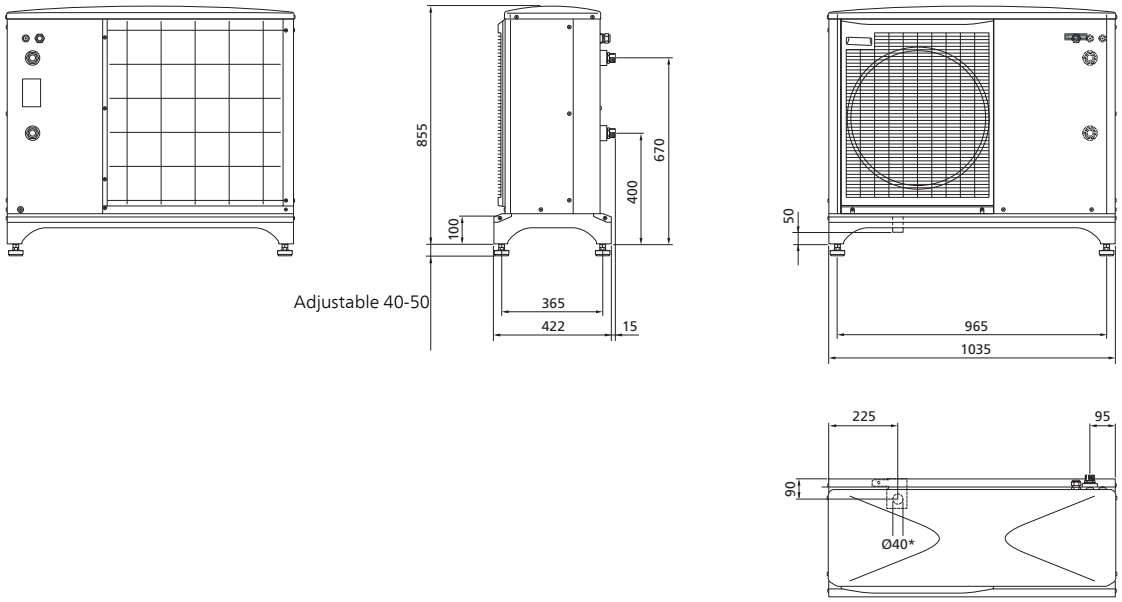

* Accessory KVR 10 is required.

F2040-12

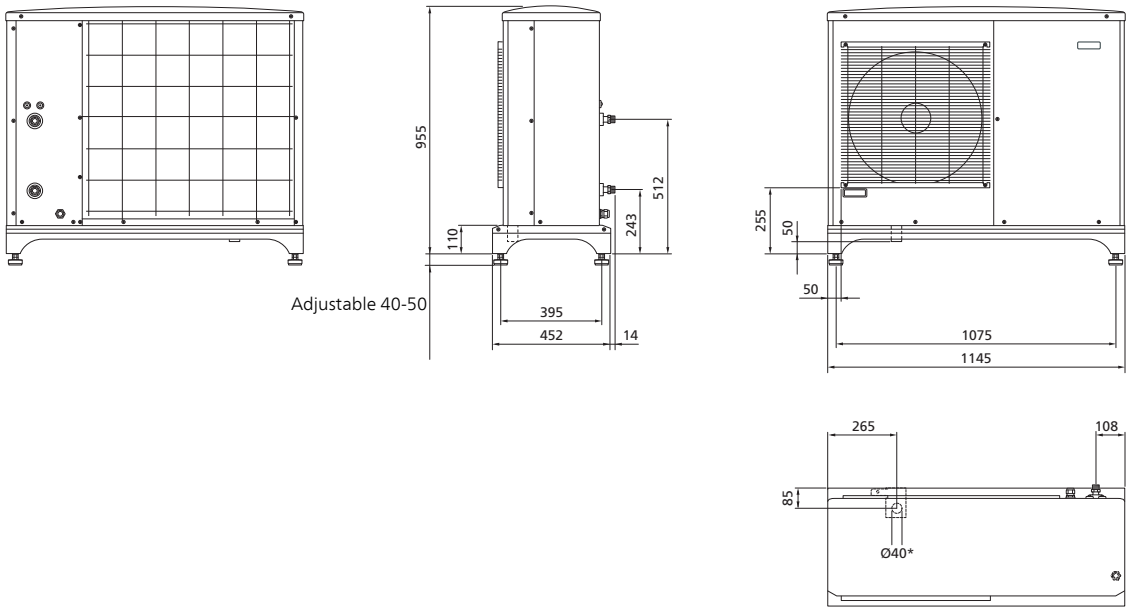

* Accessory KVR 10 is required.

F2040-16

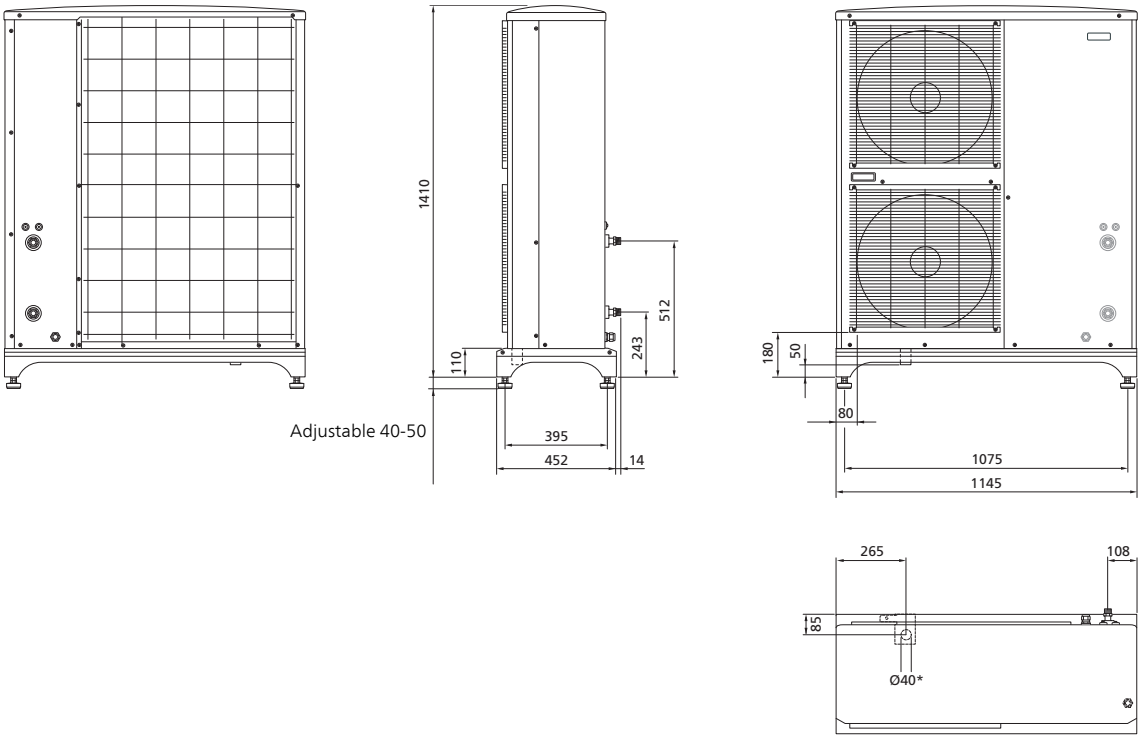

* Accessory KVR 10 is required.

Sound pressure levels

F2040 is usually placed next to a house wall, which gives a directed sound distribution that should be considered. Accordingly, you should always attempt when positioning to choose the side that faces the least sound sensitive neighbouring area.

The sound pressure levels are further affected by walls, bricks, differences in ground level, etc and should therefore only be seen as guide values.

F2040 adjusts the fan speed depending on the ambient temperature and evaporation temperature.

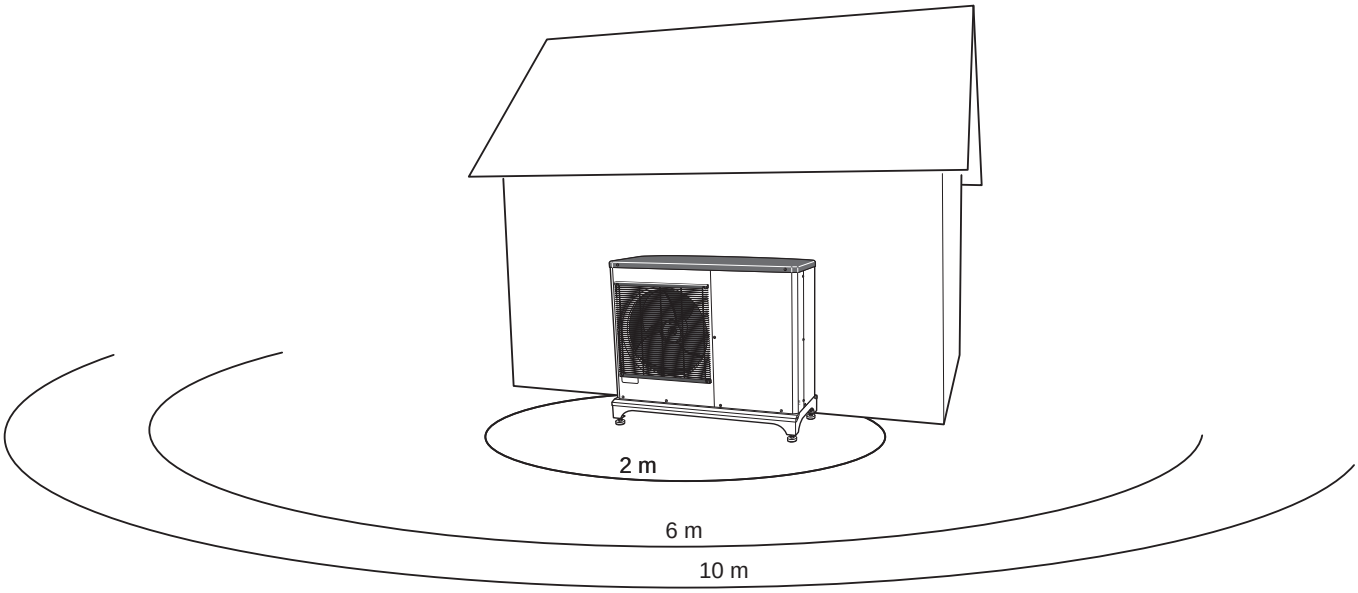

Air/water heat pump		*F2040-6*	*F2040-8*	*F2040-12*	*F2040-16*
Sound power level* According to EN12102 at 7/45 (nominal)	L_W(A)	50	54	57	61
Sound pressure level at 2 m free standing.*	dB(A)	36	40	43	47
Sound pressure level at 6 m free standing.*	dB(A)	26.5	30.5	33.5	37.5
Sound pressure level at 10 m free standing.*	dB(A)	22	26	29	33

* Free space.

Technical data CE

Air/water heat pump		*F2040-6*	*F2040-8*	*F2040-12*	*F2040-16*
Output data					
Heating	Outdoor temp./ Supply temp.	Nominal	Nominal	Nominal	Nominal
Output data according to EN 14511 ΔT5K Capacity / supplied capacity / COP (kW/kW/-)	7/35 °C (floor)	2.67/0.5/5.32	3.86/0.83/4.65	5.21/1.09/4.78	7.03/1.45/4.85
	2/35 °C (floor)	2.32/0.55/4.2	5.11/1.36/3.76	6.91/1.79/3.86	9.33/2.38/3.92
	7/45 °C	2.28/0.63/3.62	3.70/1.00/3.70	5.00/1.31/3.82	6.75/1.74/3.88
	2/45 °C	1.93/0.67/2.88	5.03/1.70/2.96	6.80/2.24/3.04	9.18/2.98/3.08
Cooling	Outd. temp: / Supply temp.	Max			
Output data according to EN 14511 ΔT5K Capacity / supplied capacity / EER	27/7 °C	5.87/1.65/3.56	7.52/2.37/3.17	9.87/3.16/3.13	13.30/3.99/3.33
	27/18 °C	7.98/1.77/4.52	11.20/3.20/3.50	11.70/3.32/3.52	17.70/4.52/3.91
	35/7 °C	4.86/1.86/2.61	7.10/2.65/2.68	9.45/3.41/2.77	13.04/4.53/2.88
	35/18 °C	7.03/2.03/3.45	9.19/2.98/3.08	11.20/3.58/3.12	15.70/5.04/3.12
Electrical data					
Rated voltage		230V ~ 50Hz, 230V 2 ~ 50Hz			
Max operating current, heat pump	A_{rms}	15	16	23	25
Max operating current, compressor	A_{rms}	14	15	22	24
Starting current	A_{rms}	5			
Nominal output, fan	W	50	86	86	2 x 86
Fuse[1)]	A_{rms}	16	16	25	25
Enclosure class		IP 24			
Refrigerant circuit					
Type of refrigerant		R410A			
GWP refrigerant		2,088			
Type of compressor		Twin Rotary			
Compressor oil		M-MA68			
Volume	kg	1.5	2.55	2.9	4.0
CO_2 equivalent	t	3.13	5.32	6.06	8.35
Cut-out value pressostat HP	MPa	-	4.15 (41.5 bar)		
Cut-out value HP		4.15 (41.5 bar)	-		
Cut-out value pressostat LP	MPa	-	0.079 (0.79 bar)		
Brine					
Airflow	m^3/h	2,530	3,000	4,380	6,000
Min. / Max. air temp.	°C	-20 / 43			
Defrosting system		Reverse cycle			
Heating medium					
Min/Max system pressure heating medium	MPa	0.05/0.25 (0.5/4.5bar)			
Min volume, climate system, heating/cooling	l	20	50	80	150
Min volume, climate system, under floor cooling	l	50	80	100	150
Max flow, climate system	l/s	0.29	0.38	0.57	0.79
Min flow, climate system, at 100% circulation pump speed (defrosting flow)	l/s	0.19	0.19	0.29	0.39
Min flow, heating	l/s	0.09	0.12	0.15	0.25
Min flow, cooling	l/s	0.11	0.15	0.20	0.32
Min. / Max. HM temp continuous operation	°C	25 / 58			
Connection heating medium ext thread		G1"			
Miscellaneous					
Weight (excl. packaging)	kg	66	90	105	135
Part No.		064 206	064 109	064 092	064 108

[1)]Specified output is limited with lower fusing.

SCOP & PDESIGNH

SCOP & $P_{designh}$ F2040 according to EN 14825								
F2040	6		8		12		16	
	$P_{designh}$	SCOP	$P_{designh}$	SCOP	$P_{designh}$	SCOP	$P_{designh}$	SCOP
SCOP 35 Average climate	4.8	4.8	8.2	4.38	11.5	4.43	14,5	4.48
SCOP 55 Average climate	5,3	3.46	7.0	3.25	10	3,38	14	3.43
SCOP 35 Cold climate	4,0	3,65	9	3.55	11.5	3.63	15	3.68
SCOP 55 Cold climate	5,6	2.97	10	2.78	13	2.85	16	2,9
SCOP 35 Warm climate	4,2	6.45	8	5,7	12	5.8	15	5.95
SCOP 55 Warm climate	4.76	4.58	8	4.58	12	4.7	15	4.8

ENERGY RATING, AVERAGE CLIMATE

Model		*F2040-6*	*F2040-8*	*F2040-12*	*F2040-16*
Control module model		*SMO*	*SMO*	*SMO*	*SMO*
Temperature application	*°C*	*35 / 55*	*35 / 55*	*35 / 55*	*35 / 55*
The product's room heating efficiency class[1)]		A++ / A++	A++ / A++	A++ / A++	A++ / A++
Space heating efficiency class of the system[2)]		A+++ / A++	A+++ / A++	A+++ / A++	A+++ / A++

[1]Scale for the product's room heating efficiency class A++ to G.

[2]Scale for the system's room heating efficiency class A+++ to G.

The reported efficiency of the package also takes the controller into account. If an external supplementary boiler or solar heating is added to the package, the overall efficiency of the package should be recalculated.

Working area

Compressor operation – heating

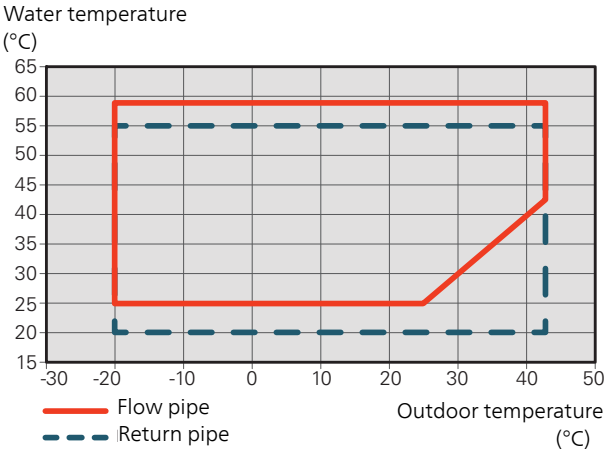

During shorter time it is allowed to have lower working temperatures on the water side, e.g. during start up.

Compressor operation – cooling

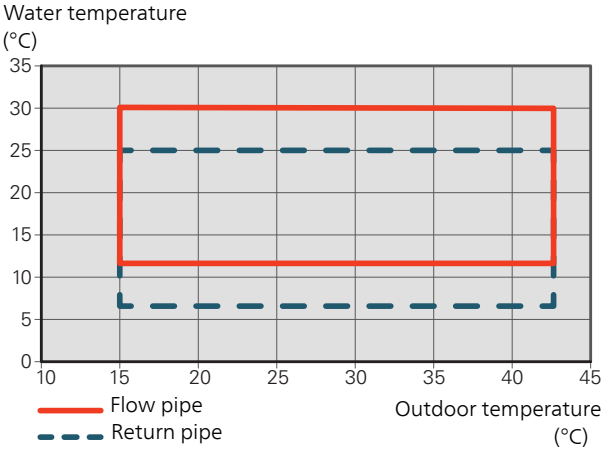

Capacity and COP

Capacity and COP at different supply temperatures. Maximum capacity including defrosting.

Max. capacity F2040-6

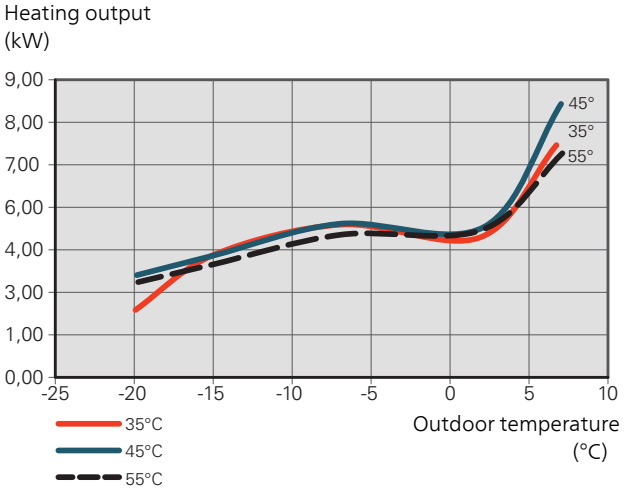

COP F2040-6

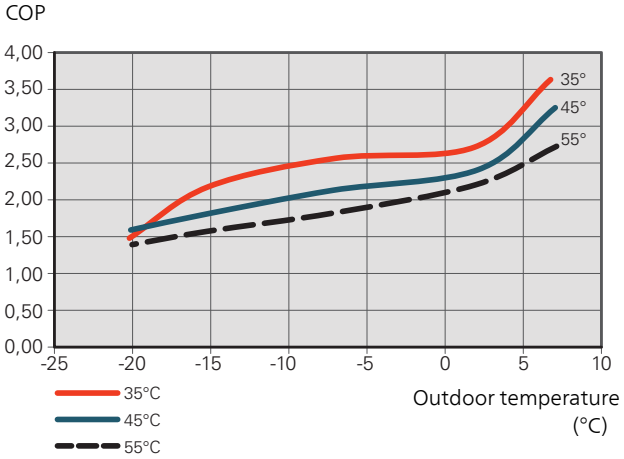

Max specified output F2040-8

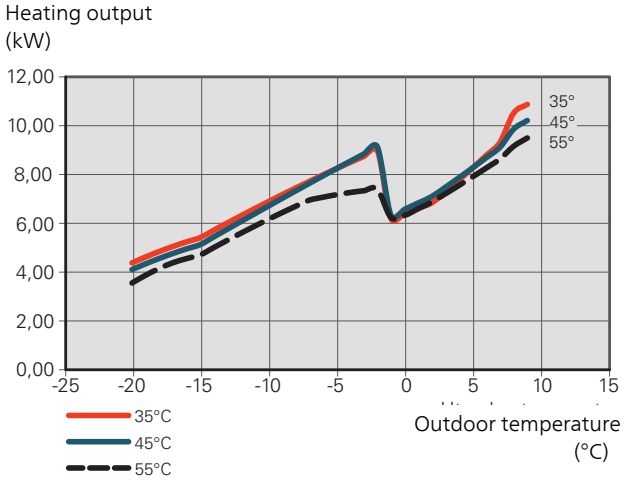

Max specified output F2040-12

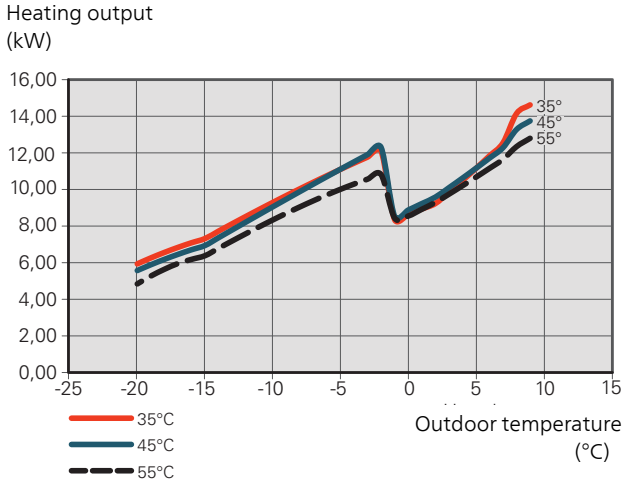

COP F2040-8

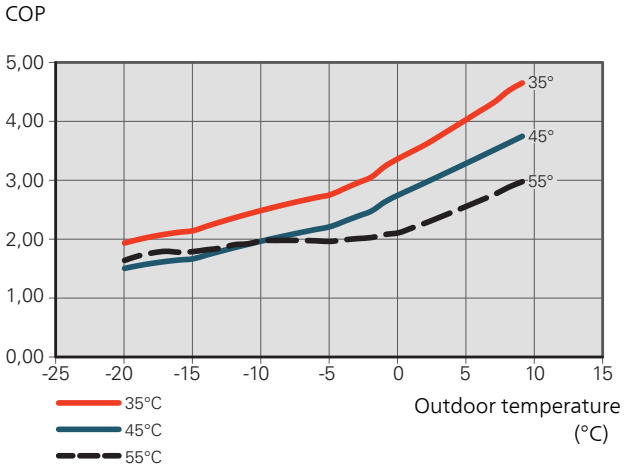

COP F2040-12

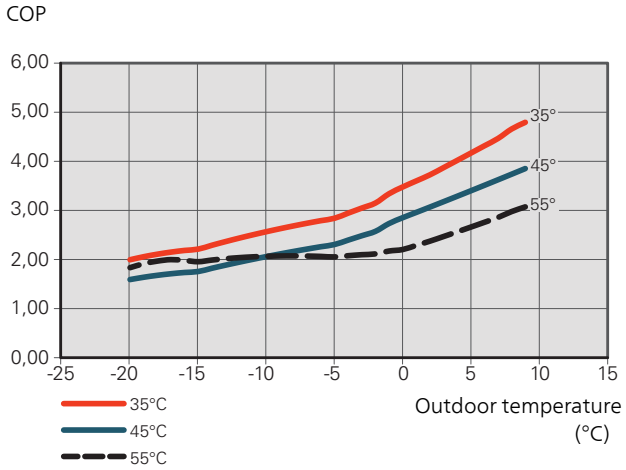

Max specified output F2040-16

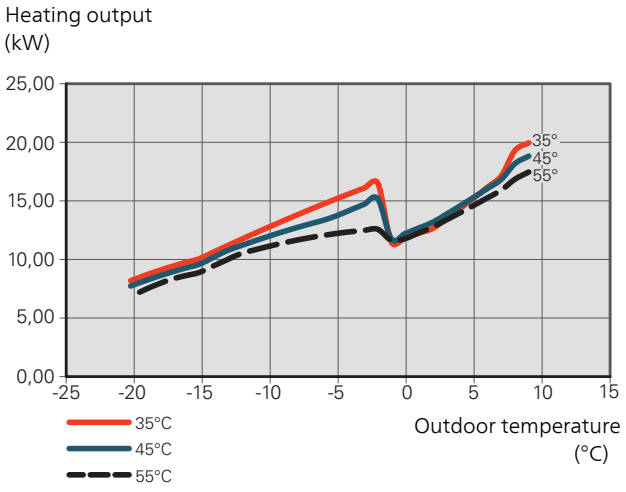

COP F2040-16

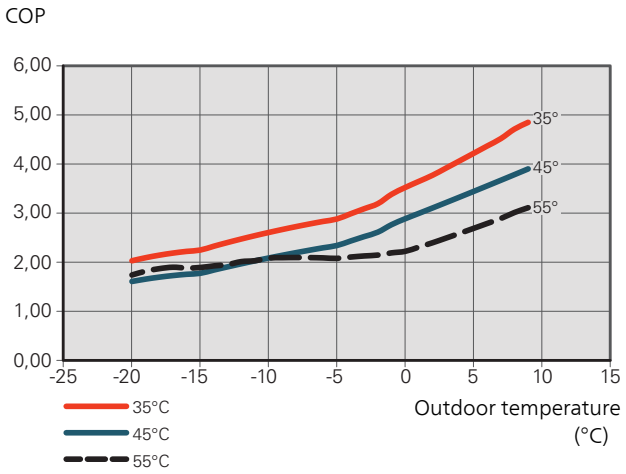

Output with lower fuse rating than recommended

Supplied power F2040-12 , fuse rating 16A

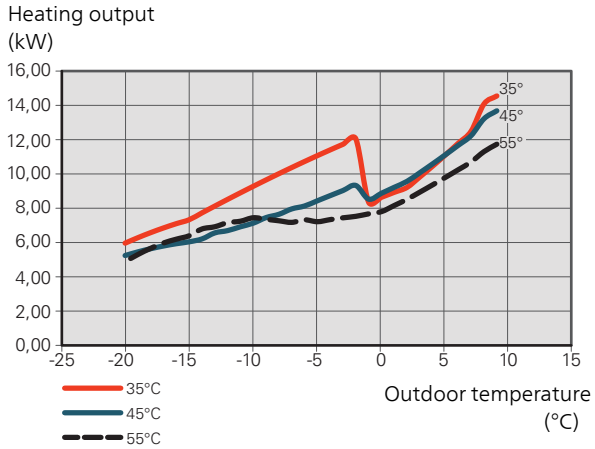

Supplied power F2040-12 , fuse rating 20A

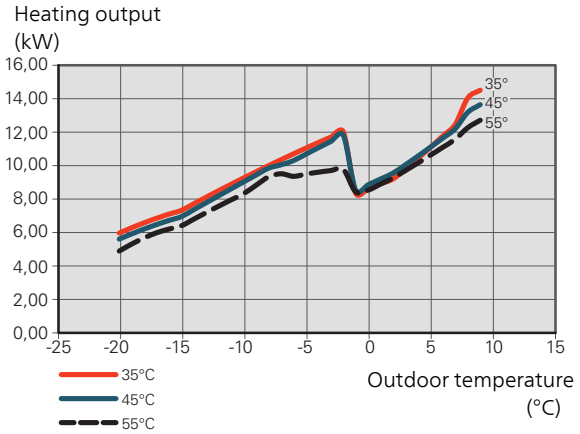

Supplied power F2040-16 , fuse rating 20A

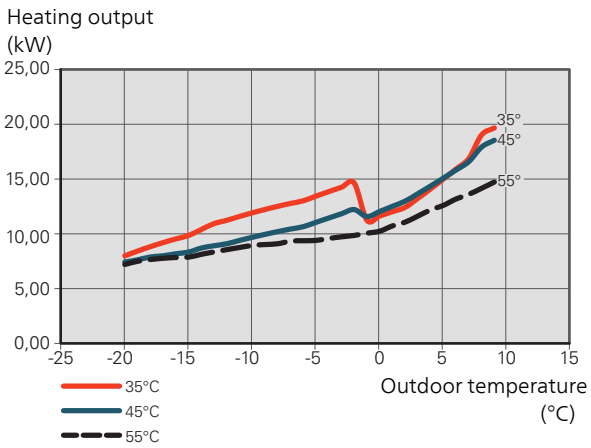

Accessories

Detailed information about the accessories and complete accessories list available at nibe.eu.

Not all accessories are available on all markets.

Condensation water pipe

Condensation water pipe, different lengths.

Earth circuit breaker 1-phase.

KVR 10-10 F2040 / HBS05

1 metres

Part no. 067 614

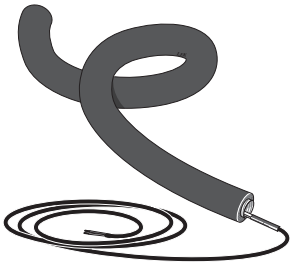

KVR 10-30 F2040 / HBS05

3 metres

Part no. 067 616

KVR 10-60 F2040 / HBS05

6 metres

Part no. 067 618

Stand and brackets

Ground stand

F2040-6, -8, -12, -16

Part no. 067 599

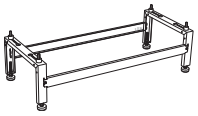

Wall bracket

F2040-6, -8, -12

Part no. 067 598

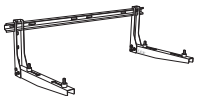

NIBE Energy Systems
Box 14, SE-285 21 Markaryd
nibe.eu

PBD EN 1812-2 M12015

This product sheet is a publication from NIBE Energy Systems. All product illustrations, facts and data are based on current information at the time of the publication's approval. NIBE Energy Systems makes reservations for any factual or printing errors in this product sheet.

©2017 NIBE ENERGY SYSTEMS